Wedged configurations with Coulomb friction: a genetic algorithm approach

Riad HASSANI [1], Ioan R. IONESCU [2]*, Edouard OUDET[2]

[1] *Laboratoire de Géophysique Interne et Tectonophysique, CNRS & Université de Savoie Campus Scientifique, 73376 Le Bourget du Lac, France.*

[2] *Laboratoire de Mathématiques, CNRS & Université de Savoie, Campus Scientifique, 73376 Le Bourget du Lac, France.*

Abstract

A wedged configuration with Coulomb friction is a nontrivial equilibrium state of a linear elastic body in a frictional unilateral contact with a rigid body under vanishing external loads. A supremal functional defined on the set of admissible normal displacement and tangential stresses is introduced. The infimum of this functional μ^w defines the critical friction coefficient for the wedged problem (WP). For friction coefficients μ with $\mu > \mu^w$ (WP) has at least a solution and for $\mu < \mu^w$ (WP) has no solution. For the in-plane problem we discuss the link between the critical friction and the smallest real eigenvalue μ^s which is related to the loss of uniqueness.

The (WP) problem is stated in a discrete framework using a mixed finite element approach and the (discrete) critical friction coefficient is introduced as the minimum of a specific functional. A genetic algorithm is used for the global minimization problem involving this non differentiable and non-convex functional. Finally, the analysis is illustrated with some numerical experiments.

Keywords : Coulomb friction, elastostatics, non-uniqueness, eigenvalue problem, mixed-finite element approximation, genetic algorithms

1. Introduction

By a "wedged configuration with Coulomb friction" we mean a nontrivial equilibrium state of a linear elastic body which is in frictional contact with a rigid body, under vanishing external loads. Wedged configurations appears to be of industrial interest in problems associated with automated assembly and manufacturing processes. The theoretical interest of wedged configurations is related to the non uniqueness of the equilibrium problem with Coulomb friction in linear elasticity (see for instance [7, 5, 6]). As far as we know, the first study on the subject was done by Barber and Hild [1], who have related it to the eigenvalue analysis of Hassani et al. [5, 6].

The aim of this paper is to find the relation between the geometry of the elastic body (including the boundaries distribution) and the friction coefficient for which wedged configurations exist. It is beyond of the scope of the present work to discuss the quasi-static or dynamic trajectory of the body from the reference configuration

*Corresponding author, +33-4-79-75-86-42, fax: +33-4-79-75-81-42, ionescu@univ-savoie.fr

to the wedged equilibrium. The (dynamic) stability conditions of the wedged configurations, which are not considered here, are the same as for the stability of any equilibrium state under Coulomb friction (see [8] for a recent study).

Let us outline the content of the paper. The wedged configuration with Coulomb friction is considered firstly in a 3-D continuous framework in section 2. The infimum of a supremal functional, defined on the set of admissible normal displacement and tangential stresses, turns out to be μ^w, the critical friction coefficient. We prove, in section 3, that for friction coefficients μ with $\mu > \mu^w$ the wedged problem has at least a solution and for $\mu < \mu^w$ it has no solution. For the in-plane problem we discuss, in section 4, the link between the critical friction and the smallest real eigenvalue μ^s which appears in [5] to be a critical coefficient for the loss of uniqueness.

In section 5 the wedged problem is stated in a discrete framework using a mixed finite element approach and the (discrete) critical friction coefficient is introduced as the minimum of a specific functional. In the next section the problem a genetic algorithm is used for the global minimization problem involving this non differentiable and non-convex functional. In section 7, we give some techniques to handle the discontinuities of the normal vector on the contact surface. Finally, the analysis is illustrated with three numerical experiments.

2. Problem statement

We consider the deformation of an elastic body occupying, in the initial unconstrained configuration a domain Ω in $\mathbf{R}^d$, with $d = 3$ in general and $d = 2$ in the in-plane configuration. The Lipschitz boundary $\partial\Omega$ of Ω consists of Γ_D, Γ_N and Γ_C. We assume that the displacement field $\boldsymbol{u}$ is vanishing on Γ_D and that the boundary part Γ_N is traction free (i.e. the density of surface forces is vanishing). In the initial configuration, the part Γ_C is considered as the candidate contact surface on a rigid foundation (see Figure 1) which means that the contact zone cannot enlarge during the deformation process. The contact is assumed to be frictional and the stick, slip and separation zones on Γ_C are not known in advance. In order to simplify the problem, and without any loss of generality we will suppose that the body Ω is not acted upon by a volume forces (i.e. the given density of volume forces are vanishing).

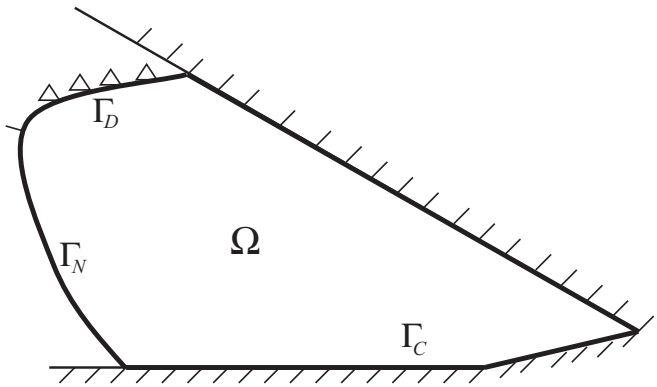

Figure 1: Schematic representation of the wedged geometry : the domain Ω and its boundary divided into three parts Γ_D, Γ_N and Γ_C.

Denoting by $\mathbf{n}$ the unit outward normal vector of $\partial\Omega$ and by $\mu > 0$ the friction coefficient on Γ_C the wedged problem (WP) can be formulated as

Wedged problem (WP). Find $\mathbf{\Phi} : \Omega \to \mathbf{R}^d$ and μ with $\mathbf{\Phi} \neq 0$ and $\mu > 0$ such that

$$\boldsymbol{\sigma}(\mathbf{\Phi}) = \mathcal{C}\,\boldsymbol{\varepsilon}(\mathbf{\Phi}), \qquad \mathbf{div}\,\boldsymbol{\sigma}(\mathbf{\Phi}) = \mathbf{0} \quad \text{in } \Omega, \tag{2.1}$$

$$\mathbf{\Phi} = \mathbf{0} \quad \text{on } \Gamma_D, \qquad \boldsymbol{\sigma}(\mathbf{\Phi})\mathbf{n} = \mathbf{0}, \quad \text{on } \Gamma_N, \tag{2.2}$$

$$\Phi_n \leq 0, \quad \sigma_n(\mathbf{\Phi}) \leq 0, \quad \Phi_n\sigma_n(\mathbf{\Phi}) = 0, \quad |\sigma_t(\mathbf{\Phi})| \leq -\mu\sigma_n(\mathbf{\Phi}) \quad \text{on } \Gamma_C, \tag{2.3}$$

where $\boldsymbol{\varepsilon}(\mathbf{\Phi}) = (\nabla\mathbf{\Phi} + \nabla^T\mathbf{\Phi})/2$ denotes the linearized strain tensor field, $\mathcal{C}$ is a fourth order symmetric and elliptic tensor of linear elasticity and we adopted the following notation for the normal and tangential components: $\mathbf{\Phi} = \Phi_n\mathbf{n} + \mathbf{\Phi}_t$ and $\boldsymbol{\sigma}(\mathbf{\Phi})\mathbf{n} = \sigma_n(\mathbf{\Phi})\mathbf{n} + \boldsymbol{\sigma}_t(\mathbf{\Phi})$.

Let remark first that $\mathbf{\Phi}$ is an equilibrium configuration of the dynamic (or quasi-static) problem with Coulomb friction but $\mathbf{\Phi}$ *is not a solution of the static problem.*

The function $\mathbf{\Phi}$ is determined up to a positive multiplicative constant, i.e. if $\mathbf{\Phi}$ is a solution then $t\mathbf{\Phi}$ is also a solution for all $t > 0$. Let also remark that if $\mathbf{\Phi}$ is a solution of (WP) for a friction coefficient μ then it is is also a solution for all friction coefficients $\bar{\mu} \geq \mu$.

Other important remark it the fact that (WP) problem depends *only* on the geometry of Ω and on the elastic coefficients (Poisson ratio in the case of isotropic elastic material).

In order to fix the ideas and to give precise framework of our discussion we shall consider in the next a class of regularity for the wedged problem.

Definition. Let $s \geq 1/2$, $p, q \in [1, +\infty]$ with $p \geq q$ be given. By a solution of the wedged problem (with the regularity (s, p, q)) we mean a nontrivial function $\mathbf{\Phi} \in H^1(\Omega)^d$ which satisfies (2.1)-(2.3), such that $\Phi_n \in H^s(\Gamma_C)$, $\boldsymbol{\sigma}_t(\mathbf{\Phi}) \in L^p(\Gamma_C)^d$ and $\sigma_n(\mathbf{\Phi}) \in L^q(\Gamma_C)$.

3. Critical friction as an infimum of a supremal functional

Let $\mathbf{\Sigma}_t$ and Σ_n be the spaces of the tangential and normal stresses and let denote by and S_n the space of normal displacements on Γ_C

$$\mathbf{\Sigma}_t = \{\boldsymbol{\tau} \in L^p(\Gamma_C)^d \ ; \ \boldsymbol{\tau} \cdot \mathbf{n} = 0\}, \quad \Sigma_n = L^q(\Gamma_C), \quad S_n = H^s(\Gamma_C),$$

with $s \geq 1/2$ and $p, q \in [1, +\infty]$.

For all $\boldsymbol{\tau} \in \mathbf{\Sigma}_t$ and $v \in S_n$ we consider the solution $\mathcal{U}(\boldsymbol{\tau}, v) = \boldsymbol{u} \in H^1(\Omega)^d$ of the following elasto-static problem :

$$\boldsymbol{\sigma}(\boldsymbol{u}) = \mathcal{C}\,\boldsymbol{\varepsilon}(\boldsymbol{u}), \qquad \mathbf{div}\ \boldsymbol{\sigma}(\boldsymbol{u}) = \mathbf{0} \quad \text{in } \Omega, \tag{3.4}$$

$$\boldsymbol{u} = \mathbf{0} \quad \text{on } \Gamma_D, \qquad \boldsymbol{\sigma}(\boldsymbol{u})\mathbf{n} = \mathbf{0} \quad \text{on } \Gamma_N, \tag{3.5}$$

$$u_n = v \quad \text{on } \Gamma_C, \qquad \sigma_t(\boldsymbol{u}) = \boldsymbol{\tau} \quad \text{on } \Gamma_C. \tag{3.6}$$

Since the stress $\boldsymbol{\sigma}(\boldsymbol{u}) \in H(\mathbf{div}\ ;\Omega)^d$ and $\sigma_n(\boldsymbol{u}) \in H^{-1/2}(\Gamma_C)$ we can define the operator $\mathcal{L} : \mathbf{\Sigma}_t \times S_n \to H^{-1/2}(\Gamma_C)$ by $\mathcal{L}(\boldsymbol{\tau}, v) =: \sigma_n(\boldsymbol{u})$.

Let $\mathcal{S}$ be a cone in the space of tangential stresses and normal displacements $\mathbf{\Sigma}_t \times S_n$ defined by

$$\mathcal{S} =: \{(\boldsymbol{\tau}, v) \in \mathbf{\Sigma}_t \times S_n \ ; \ (\boldsymbol{\tau}, v) \neq 0, \quad v \leq 0, \ v|\boldsymbol{\tau}| = 0, \quad \text{on } \Gamma_C\},$$

and we define the cone of admissible states $\mathcal{S}^{adm}$ (tangential stresses and normal displacements) by

$$\mathcal{S}^{adm} =: \{(\boldsymbol{\tau}, v) \in \mathcal{S} \ ; \ \ \mathcal{L}(\boldsymbol{\tau}, v) \in \Sigma_n, \ \mathcal{L}(\boldsymbol{\tau}, v) \leq 0, \ v\mathcal{L}(\boldsymbol{\tau}, v) = 0 \ \text{ on } \Gamma_C\}.$$

We consider now the supremal functional $J : \mathcal{S} \to \mathbf{R} \cup \{+\infty\}$ defined by

$$J(\boldsymbol{\tau}, v) = \operatorname*{ess\,sup}_{x \in \Gamma_C} Q(|\boldsymbol{\tau}(x)|, \mathcal{L}(\boldsymbol{\tau}, v)(x)),$$

where $Q : \mathbf{R}_+ \times \mathbf{R}_- \to \mathbf{R}_+ \cup \{+\infty\}$ is a quotient given by

$$Q(t, r) =: \begin{cases} -\dfrac{t}{r}, & \text{if} \quad r < 0 \\ 0, & \text{if} \quad t = 0 \\ +\infty, & \text{if} \quad r = 0, t > 0, \end{cases} \tag{3.7}$$

The following lemma gives the connection between the supremal functional J and the wedged problem.

Lemma 3.1. *For all $(\boldsymbol{\tau}, v) \in \mathcal{S}^{adm}$ with $J(\boldsymbol{\tau}, v) < +\infty$ the field $\mathbf{\Phi} = \mathcal{U}(\boldsymbol{\tau}, v)$ is a solution of (WP) with $\mu = J(\boldsymbol{\tau}, v)$.*

Proof. Since $\mathbf{\Phi} = \mathcal{U}(\boldsymbol{\tau}, v)$, from (3.4-3.5) we deduce that $\mathbf{\Phi}$ satisfies (2.1-2.2). Bearing in mind that $(\boldsymbol{\tau}, v) \in \mathcal{S}^{adm}$ and $\sigma_n(\mathbf{\Phi}) = \mathcal{L}(\boldsymbol{\tau}, v)$ we get $\Phi_n \leq 0$, $\sigma_n(\mathbf{\Phi}) \leq 0$, and $\Phi_n \sigma_n(\mathbf{\Phi}) = 0$. If $\sigma_n(\mathbf{\Phi})(x) = 0$ from $J(\boldsymbol{\tau}, v) < +\infty$ we get $|\sigma_t(\mathbf{\Phi})(x)| = 0$. If $\sigma_n(\mathbf{\Phi})(x) < 0$ then $-|\boldsymbol{\sigma}_t(\mathbf{\Phi})(x)|/\sigma_n(\mathbf{\Phi})(x) = Q(|\boldsymbol{\tau}(x)|, \mathcal{L}(\boldsymbol{\tau}, v)(x)) \leq J(\boldsymbol{\tau}, v) = \mu$ and we obtain $|\sigma_t(\mathbf{\Phi})(x)| \leq -\mu\sigma_n(\mathbf{\Phi})(x)$ for all $x \in \Gamma_C$ which means that $\mathbf{\Phi}$ is a solution of (WP).□

Let μ^w be the infimum of J on $\mathcal{S}^{adm}$, given by

$$\mu^w =: \inf_{(\boldsymbol{\tau},v)\in\mathcal{S}^{adm}} J(\boldsymbol{\tau},v).$$

As it is proved below μ^w is the *critical friction coefficient (for the wedged problem).*
Theorem 1. *Suppose that $\mathcal{S}^{adm}$ is not empty and μ^w is finite. Then we have*
i) For all $\mu > \mu^w$ the problem (WP) has at least a solution.
ii) If $\mu < \mu^w$ then (WP) has no solution.

Proof. i) It's a direct consequence of Lemma 3.1.

ii) Let $\mathbf{\Phi}$ be a solution of (WP) and denote by $v = \Phi_n, \boldsymbol{\tau} = \sigma_t(\mathbf{\Phi})$. Let us prove that $\mu \geq \mu^w$. From(2.3) we get that if $v(x) < 0$ then $\sigma_n(\mathbf{\Phi})(x) = 0$ and then $|\boldsymbol{\tau}(x)| = 0$, hence $(\boldsymbol{\tau}, v) \in \mathcal{S}^{adm}$. Let us compute now $J(\boldsymbol{\tau}, v)$ to deduce that $\mu \geq J(\boldsymbol{\tau}, v)$ and since $J(\boldsymbol{\tau}, v) \geq \mu^w$ we get $\mu \geq \mu^w$. Indeed if $\mathcal{L}(\boldsymbol{\tau}, v)(x) = \sigma_n(\mathbf{\Phi})(x) < 0$ then $\mu \geq Q(|\boldsymbol{\tau}(x)|, \sigma_n(\mathbf{\Phi})(x))$ and if $\sigma_n(\mathbf{\Phi})(x) = 0$ then $|\boldsymbol{\tau}(x)| = 0$ and $Q(|\boldsymbol{\tau}(x)|, \sigma_n(\mathbf{\Phi})(x)) = 0 < \mu$. Taking the upper bound for $x \in \Gamma_C$ we get $\mu \geq J(\boldsymbol{\tau}, v) \geq \mu^w$. □

As it follows from the above theorem for a given geometry and for some given elastic coefficients (Poisson ratio in the case of isotropic elastic materials), wedged configurations exist only if the friction coefficient is larger than the critical value μ^w.

4. Links with spectral analysis

We consider in this section the in-plane configuration, i.e. we have to take $d = 2$. This assumption is essential in defining the spectral problem.

Let $\mathcal{P}$ be a partition of the boundary Γ_C into two zones : Γ_C^{free} the free (no contact) zone and and Γ_C^0 the non vanishing tangential stress zone. With this partition of Γ_C we define a new partition of $\Gamma = \Gamma_D \cup \Gamma_N^0 \cup \Gamma_C^0$, where $\Gamma_N^0 = \Gamma_N \cup \Gamma_C^{free}$, and we associate a given "directional function" $\chi : \Gamma_C^0 \to \{-1, 1\}$.

For a given couple of partition $\mathcal{P}$ and directional function χ we consider the spectral problem (SP)= (SP)$(\mathcal{P}, \chi)$ introduced in [5, 6] as follows :
Spectral problem (SP). Find $\mu^s \geq 0$ and the nontrivial displacement field $\mathbf{\Phi}^s : \Omega \to \mathbf{R}^2$ such that

$$\boldsymbol{\sigma}(\mathbf{\Phi}^s) = \mathcal{C}\,\boldsymbol{\varepsilon}(\mathbf{\Phi}^s), \qquad \mathbf{div}\,\boldsymbol{\sigma}(\mathbf{\Phi}^s) = \mathbf{0} \quad \text{in } \Omega, \tag{4.8}$$

$$\mathbf{\Phi}^s = \mathbf{0} \quad \text{on } \Gamma_D, \qquad \boldsymbol{\sigma}(\mathbf{\Phi}^s)\mathbf{n} = \mathbf{0} \quad \text{on } \Gamma_N^0, \tag{4.9}$$

$$\Phi_n^s = 0, \qquad \sigma_t(\mathbf{\Phi}^s) = -\mu^s \chi \sigma_n(\mathbf{\Phi}^s) \quad \text{on } \Gamma_C^0, \tag{4.10}$$

where we have chosen the tangent vector $\boldsymbol{t} = (-n_2, n_1)$ with respect to the unit outward normal $\mathbf{n} = (n_1, n_2)$ of $\partial\Omega$.
Lemma 4.2. *Let $\mu^s = \mu^s(\mathcal{P}, \chi) \geq 0$ and $\mathbf{\Phi}^s = \mathbf{\Phi}^s(\mathcal{P}, \chi)$ be a solution of the spectral problem (SP) (with the regularity (s, p, q)) for a given choice of the partition $\mathcal{P}$ and directional function χ. If $\Phi_n^s \leq 0, \sigma_n(\mathbf{\Phi}^s) \leq 0$ on Γ_C (or $\Phi_n^s \geq 0, \sigma_n(\mathbf{\Phi}^s) \geq 0$ on Γ_C) then $\mathbf{\Phi}^s$ (or $-\mathbf{\Phi}^s$) is a solution of the problem (WP) and we have*

$$\mu^w \leq \mu^s(\mathcal{P}, \chi). \tag{4.11}$$

As it follows from [5, 6] the smallest real eigenvalue μ^s appears as a critical coefficient for the loss of uniqueness. No other conditions on the eigenfunction are necessary. In contrast, for the wedged problem, the eigenfunction corresponding to the smallest real eigenvalue has to satisfy the above inequalities on Γ_C. If these inequalities are not satisfied then there is no connection between the spectral problem and the wedged configuration (i.e. we can have $\mu^s < \mu^w$ too). The spectral critical coefficient μ^s is related to the fact that a given geometry is open to a "general" non-uniqueness and the wedged critical coefficient μ^w is related to a special type of non-uniqueness in which one of the solution is the trivial one.

Proof. For $x \in \Gamma_C^0$ we have $\Phi_n^s(x) = 0$ and $|\sigma_t(\mathbf{\Phi}^s)(x)| = -\mu^s \sigma_n(\mathbf{\Phi}^s)(x)$. If $x \in \Gamma_N^0$ then $\sigma_t(\mathbf{\Phi}^s)(x) = \sigma_n(\mathbf{\Phi}^s)(x) = 0$ hence $\mathbf{\Phi}^s$ satisfies (2.3) for all $x \in \Gamma_C$. That means that $\mathbf{\Phi}^s$ is a solution of (WP) and from Theorem 1 we get the inequality. □

The above spectral problem has a low cost of computational time. In order to obtain a upper bound of μ^w, one can choose to compute the smallest positive eigenvalue $\mu^s(\mathcal{P}, \chi)$ for different choices of $\mathcal{P}$ and χ. If the above inequalities on the normal displacement and normal stress are verified then $\mu^s(\mathcal{P}, \chi)$ gives an upper estimation of μ^w. However, the computational time for changing the boundary conditions (included in the partition of Γ_C) and the great number of choices for $\mathcal{P}$ and χ, make this method not so attractive in computing the critical friction for the wedged problem.

5. Mixed finite element approach of the critical friction

The body Ω is discretized by using a family of triangulations $(\mathcal{T}_h)_h$ made of finite elements of degree $k \geq 1$ where $h > 0$ is the discretization parameter representing the greatest diameter of a triangle in $\mathcal{T}_h$. The space of finite elements approximation is:

$$\mathbf{V}_h = \Big\{ \boldsymbol{v}_h;\ \boldsymbol{v}_h \in (C(\overline{\Omega}))^d,\ \boldsymbol{v}_h|_T \in (P_k(T))^d\ \ \forall T \in \mathcal{T}_h,\ \boldsymbol{v}_h = \mathbf{0} \text{ on } \Gamma_D \Big\},$$

where $C(\overline{\Omega})$ stands for the space of continuous functions on $\overline{\Omega}$ and $P_k(T)$ represents the space of polynomial functions of degree k on T. On the boundary of Ω, we still keep the notation $\boldsymbol{v}_h = v_{hn}\mathbf{n} + \boldsymbol{v}_{ht}$ for every $\boldsymbol{v}_h \in \mathbf{V}_h$ and we denote by $(T_h)_h$ the family of $(d-1)$-dimensional mesh on Γ_C inherited by $(\mathcal{T}_h)_h$. Set

$$S_{hn} = \Big\{ \nu; \nu = \boldsymbol{v}_h|_{\Gamma_C} \cdot \mathbf{n},\ \boldsymbol{v}_h \in \mathbf{V}_h \Big\},$$

the space of normal displacements which is included in the space of continuous functions on Γ_C which are piecewise of degree k on $(T_h)_h$. For the tangential and normal stresses we put

$$\mathbf{\Sigma}_{ht} = \Big\{ \boldsymbol{\tau}_h; \boldsymbol{\tau}_h \in (C(\overline{\Gamma}_C))^{d-1}, \boldsymbol{\tau}_h|_T \in (P_k(T))^{d-1}\ \ \forall T \in T_h \Big\},$$

$$\Sigma_{hn} = \Big\{ \sigma_h; \sigma_h \in C(\overline{\Gamma}_C), \sigma_h|_T \in P_k(T)\ \ \forall T \in T_h \Big\},$$

The discrete problem issued from the continuous wedged problem (WP) becomes:

Discrete wedged problem (WP)$_h$. Find $(\boldsymbol{\Phi}_h, \lambda_{hn}, \boldsymbol{\lambda}_{ht}) \in \mathbf{V}_h \times \Sigma_{hn} \times \boldsymbol{\Sigma}_{ht}$ such that

$$\int_\Omega \mathcal{C}\boldsymbol{\varepsilon}(\boldsymbol{\Phi}_h) : \boldsymbol{\varepsilon}(\boldsymbol{v}_h)\, d\Omega = \int_{\Gamma_C} \lambda_{hn} v_{hn}\, d\Gamma + \int_{\Gamma_C} \boldsymbol{\lambda}_{ht} \cdot \boldsymbol{v}_{ht}\, d\Gamma, \tag{5.12}$$

$$(\Phi_n)_i \le 0,\ (\lambda_{hn})_i \le 0,\ (\Phi_n)_i(\lambda_{hn})_i = 0, \qquad |(\boldsymbol{\lambda}_{ht})_i| \le -\mu(\lambda_{hn})_i, \tag{5.13}$$

for all $\boldsymbol{v}_h \in \mathbf{V}_h$ and $1 \le i \le p$, where $(\Phi_n)_i$, $(\lambda_{hn})_i$ and $(\boldsymbol{\lambda}_{ht})_i$ with $1 \le i \le p$, denote the nodal values on Γ_C of Φ_{hn}, λ_{hn} and $\boldsymbol{\lambda}_{ht}$ respectively.

Remark 5.3. One can formulate the finite element approach of the wedged problem using the generalized loads. To do this we denote by p the dimension of S_{hn} and by $\psi_i, 1 \le i \le p$ the corresponding canonical finite element basis functions of degree k. For all $\nu \in S_{hn}$ (or in $\boldsymbol{\Sigma}_{ht}$) we shall denote by $F(\nu) = (F_i(\nu))_{1\le i\le p}$ the generalized loads at the nodes of Γ_C:

$$F_i(\nu) = \int_{\Gamma_C} \nu\psi_i, \quad \forall\, 1 \le i \le p.$$

The corresponding boundary conditions for the wedged problem with generalized loads read

$$(\Phi_n)_i \le 0,\ F_i(\lambda_n) \le 0,\ (\Phi_n)_i F_i(\lambda_n) = 0,\ |F_i(\boldsymbol{\lambda}_t)| \le -\mu F_i(\lambda_n), \qquad 1 \le i \le p. \tag{5.14}$$

If a generalized load formulation of the wedged problem is adopted (i.e. (5.13) is replaced by (5.14)) then the method developed in the next two sections are essentially the same. Only some minor modifications have to be done.

Let us define now the discrete version of the operator $\mathcal{L}$ by $\mathcal{L}_h : \boldsymbol{\Sigma}_{ht} \times S_{hn} \to \Sigma_{hn}$ as follows. For all $\boldsymbol{\tau}_h \in \boldsymbol{\Sigma}_{ht}$ and $w_h \in S_{hn}$ we consider the solution $\boldsymbol{u}_h = \mathcal{U}_h(\boldsymbol{\tau}_h, w_h) \in \mathbf{V}_h$ of the following elasto-static problem

$$u_{hn} = w_h \text{ on } \Gamma_C, \qquad \int_\Omega \mathcal{C}\boldsymbol{\varepsilon}(\boldsymbol{u}_h) : \boldsymbol{\varepsilon}(\boldsymbol{v}_h)\, d\Omega = \int_{\Gamma_C} \boldsymbol{\tau}_h \cdot \boldsymbol{v}_{ht}\, d\Gamma, \quad \forall \boldsymbol{v}_h \in \mathbf{W}_h, \tag{5.15}$$

where

$$\mathbf{W}_h =: \Big\{ \boldsymbol{v}_h \in \mathbf{V}_h\ ;\ \boldsymbol{v}_h \cdot \mathbf{n} = 0, \quad \text{on } \Gamma_C \Big\}.$$

Let $\mathcal{L}_h(\boldsymbol{\tau}_h, w_h) \in \Sigma_{hn}$ be the normal stress associated to $\boldsymbol{u}_h = \mathcal{U}_h(\boldsymbol{\tau}_h, w_h)$, i.e.

$$\int_\Omega \mathcal{C}\boldsymbol{\varepsilon}(\boldsymbol{u}_h) : \boldsymbol{\varepsilon}(\boldsymbol{v}_h)\, d\Omega = \int_{\Gamma_C} \mathcal{L}_h(\boldsymbol{\tau}_h, w_h) v_{hn}\, d\Gamma + \int_{\Gamma_C} \boldsymbol{\tau}_h \cdot \boldsymbol{v}_{ht}\, d\Gamma, \quad \forall \boldsymbol{v}_h \in \mathbf{V}_h. \tag{5.16}$$

If p is the dimension of S_{hn} then the (discrete) linear operator $\mathcal{L}_h$ is a $p \times 3p$ matrix for the 3-D problem and a $p \times 2p$ matrix for the in-plane problem.

Let $\mathcal{S}_h$ be the cone (in the space of tangential stresses and normal displacements $\boldsymbol{\Sigma}_{ht} \times S_{hn}$) given by

$$\mathcal{S}_h =: \{(\boldsymbol{\tau}_h, v_h) \in \boldsymbol{\Sigma}_t \times S_n\ ;\ (\boldsymbol{\sigma}, v_h) \ne 0, \quad (v_h)_i \le 0,\ (v_h)_i|(\boldsymbol{\tau}_h)_i| = 0, \quad 1 \le i \le p\},$$

and $\mathcal{S}_h^{adm}$ the cone of admissible states

$$\mathcal{S}_h^{adm} =: \{(\boldsymbol{\tau}_h, v_h) \in \mathcal{S}_h \ ; \quad (\mathcal{L}_h(\boldsymbol{\tau}_h, v_h))_i \leq 0, \ (v_h)_i(\mathcal{L}_h(\boldsymbol{\tau}_h, v_h))_i = 0 \ \ 1 \leq i \leq p\}. \tag{5.17}$$

We define the (discrete) supremal functional $J_h : \mathcal{S}_h^{adm} \to \mathbf{R} \cup \{+\infty\}$ as follows

$$J_h(\boldsymbol{\tau}_h, v_h) = \max_{1 \leq i \leq p} Q(|(\boldsymbol{\tau}_h)_i|, (\mathcal{L}_h(\boldsymbol{\tau}_h, v_h))_i),$$

with Q given by (3.7) and we put μ_h^w as

$$\mu_h^w =: \inf_{(\boldsymbol{\tau}_h, v_h) \in \mathcal{S}_h^{adm}} J_h(\boldsymbol{\tau}_h, v_h).$$

which turns out to be (see the following theorem) the *(discrete) critical frictional coefficient.*

Theorem 2. *Suppose that $\mathcal{S}_h^{adm}$ is not empty and μ_h^w is finite. Then we have*

i) There exists $(\boldsymbol{\tau}_h^*, v_h^*) \in \mathcal{S}_h^{adm}$ such that $J_h(\boldsymbol{\tau}_h^*, v_h^*) = \mu_h^w$. Moreover, $(\boldsymbol{\Phi}_h^*, \lambda_{hn}^*, \boldsymbol{\lambda}_{ht}^*)$ given by $\boldsymbol{\Phi}_h^* = \mathcal{U}_h(\boldsymbol{\tau}_h^*, v_h^*), \lambda_{hn}^* = \mathcal{L}_h(\boldsymbol{\tau}_h^*, v_h^*), \boldsymbol{\lambda}_{ht}^* = \boldsymbol{\tau}_h^*$, is a solution of (WP)$_h$ for $\mu \geq \mu_h^w$.

ii) If $\mu < \mu_h^w$ then the problem (WP)$_h$ has no solution.

Proof. i) Since the the functional J_h is positively homogenous of degree 0, i.e. $J_h(t(\boldsymbol{\tau}_h, v_h)) = J_h(\boldsymbol{\tau}_h, v_h)$ for all $t > 0$, we can normalize $\mathcal{S}_h^{adm}$ through a given norm. To do this let B_1 be a unit ball in the space $\boldsymbol{\Sigma}_{ht} \times S_{hn}$ and $\mathcal{S}_h^1 = \mathcal{S}_h^{adm} \cap B_1$. We can reduce now the minimization of J_h on the closed cone $\mathcal{S}_h^{adm}$ to the minimization of J_h on the compact set $\mathcal{S}_h^1$, i.e. we have

$$\mu_h^w =: \inf_{(\boldsymbol{\tau}_h, v_h) \in \mathcal{S}_h^1} J_h(\boldsymbol{\tau}_h, v_h).$$

Let us prove now that J_h is lower semi-continuous (l.s.c.). To see that we remark that Q is l.s.c. on $\mathbf{R}_+ \times \mathbf{R}_-$ which means that $W_i(\boldsymbol{\tau}_h, v_h) =: Q(|(\boldsymbol{\tau}_h)_i|, (\mathcal{L}_h(\boldsymbol{\tau}_h, v_h))_i)$ is l.s.c. on $\mathcal{S}_h^1$ for all $1 \leq i \leq p$. Since J_h is a maximum of a finite set of l.s.c. functionals we get that that J_h is l.s.c. also. We can deduce now the existence of a global minimum $(\boldsymbol{\tau}_h^*, v_h^*)$ of the l.s.c. functional J_h on a compact set $\mathcal{S}_h^1$ from the Weistrass theorem. One can use the same techniques as in the proof of Lemma 3.1 to deduce that $(\boldsymbol{\Phi}_h^*, \lambda_{hn}^*, \boldsymbol{\lambda}_{ht}^*)$ is a solution of (WP)$_h$ for $\mu \geq \mu_h^w$.

ii) The proof is similar to the proof of Theorem 1 ii). □

6. Genetic algorithm approach

For the sake of simplicity, only the plane problem will be considered here but the extension to the 3-D problem can be done without any difficulty.

We give in the next some details of application of the Genetic algorithm to the plane problem for $k = 1$. For all $(\tau_h, v_h) \in \Sigma_{ht} \times S_{hn}$ with $\tau_h(x) = \sum_{i=1}^p T_i \psi_i(x), v_h(x) =$

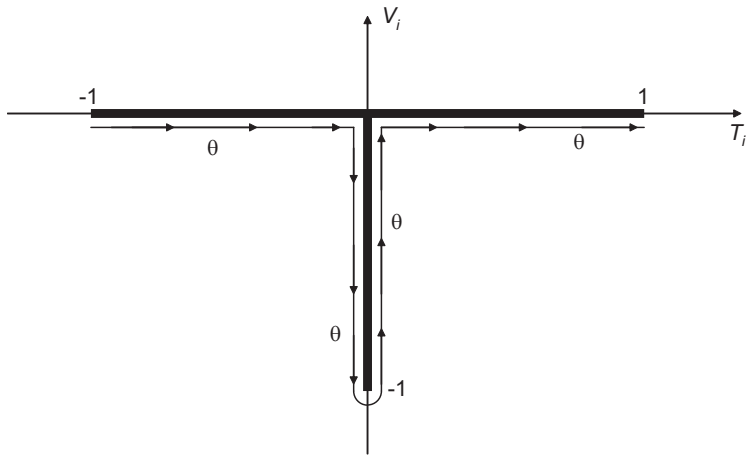

Figure 2: Example of function $\boldsymbol{\theta} = (T, V) : [-1, 1] \to \{0\} \times [-1, 0] \cup [-1, 1] \times \{0\}$ used to reduce the dimension of of $\mathcal{S}_h^1$

$\sum_{i=1}^p V_i \psi_i(x)$, we have $(\tau_h)_i = T_i, (v_h)_i = V_i$. First we have to compute the matrix L_{ij} of $\mathcal{L}_h$, i.e.

$$\mathcal{L}_h(\tau_h, v_h)(x) = \sum_{i=1}^p \left(\sum_{j=1}^p L_{ij} T_j + \sum_{k=1}^p L_{i,p+k} V_k \right) \psi_i(x). \tag{6.18}$$

Since the functional J_h is positively homogenous of degree 0 (i.e. $J_h(t(\boldsymbol{\tau}, v)) = J_h(\boldsymbol{\tau}, v)$ for all $t > 0$) we can normalize $\mathcal{S}_h$ through the "maximum" norm to get

$$\mathcal{S}_h^1 =: \{(\tau_h, v_h) \in \Sigma_t \times S_n \ ; \ V_i \in [-1, 0], \ T_i \in [-1, 1], \ V_i|T_i| = 0, \quad 1 \le i \le p\}.$$

The genetic algorithm is a technique of global optimization which can be useful if the computation time for J_h is small and if the dimension of $\mathcal{S}_h^1$ is not too large. In order to increase the efficiency of the algorithm, we reduce the dimension of $\mathcal{S}_h^1$ from $2p$ to p as follows. Firstly we remark that if $(\tau_h, v_h) \in \mathcal{S}_h^1$ then $(T_i, V_i) \in D =: \{0\} \times [-1, 0] \cup [-1, 1] \times \{0\}$. After that we construct $\boldsymbol{\theta} = (T, V) : [-1, 1] \to D$ as a continuous and surjective function. One choice of $\boldsymbol{\theta}(s) = (T(s), V(s))$ can be the following (see Figure 2)

$$\begin{cases} T(s) = (4s+1)/3, \ V(s) = 0, \quad \text{if} \quad s \in [-1, -1/4] \\ T(s) = 0, \ V(s) = 4|s| - 1, \quad \text{if} \quad s \in [-1/4, 1/4] \\ T(s) = (4s-1)/3, \ V(s) = 0, \quad \text{if} \quad s \in [1/4, 1], \end{cases}$$

We notice that the application $\Psi : (s_1, .., s_p) \to (\sum_{i=1}^p T(s_i)\psi_i, \sum_{i=1}^p V(s_i)\psi_i)$ is surjective from $[-1, 1]^p$ to $\mathcal{S}_h^1$. We can define now the set

$$K =: \left\{ (s_1, .., s_p) \in [-1, 1]^p \ ; \ \Psi(s_1, .., s_p) \in \mathcal{S}_h^{adm} \right\} \tag{6.19}$$

and $\mathcal{J} : [-1,1]^p \to \mathbf{R}_+ \cup \{+\infty\}$ such that $\mathcal{J}(s_1,..,s_p) = J_h(\Psi(s_1,..,s_p))$

$$\mathcal{J}(s_1,..,s_p) =: \begin{cases} \max\limits_{i=1,..,p} Q(T(s_i), \sum\limits_{j=1}^{p} L_{ij}T(s_j) + \sum\limits_{k=1}^{p} L_{i,p+k}V(s_k)), & \text{if } (s_1,..,s_p) \in K \\ +\infty, \quad \text{otherwise}, \end{cases} \tag{6.20}$$

to get the following minimization problem for $\mathcal{J}$ on $[-1,1]^p$

$$\mu_h^w = \min_{(s_1,..,s_p)\in[-1,1]^p} \mathcal{J}(s_1,..,s_p). \tag{6.21}$$

From the definition of our optimization problem it is intuitively clear that the supremal functional has a great number of local minima. On the other hand, the functional is very smooth almost everywhere with respect to the parameters s_i inside of the admissible set. With such a local regularity it is straightforward to implement an efficient procedure of local optimization (with Newton's like methods for instance).

Considering those two aspects of our problem we used a stochastic algorithm based on the so called "genetic hybrid technique" (see for instance [4, 3] for the theoretical details of such aglorithms). The main idea of those methods is to manage in the same time a global random exploration of the search space and some local optimization steps. More precisely, we used an implementation of this stochastic method very close from the one proposed in the EO library (see [2]).

7. How to manage the discontinuities of the normal on the contact surface

Let us suppose that the contact surfaces Γ_C contains a (wedged) point P where the outward unit normal $\mathbf{n}$ has a discontinuity. Since we shall choose P to be a node (denoted by k), the same discontinuity will be inherited by all the meshes which approach Ω. Let us firstly remark that the normal and tangential stresses $(\lambda_{hn})_k$ and $(\lambda_{ht})_k$ of the mixed finite element formulation, given through (5.12), are well defined. That is a consequence of the fact that we deal in (5.12) with an integral formulation and the normal is well defined on each segment of the contact boundary. In contrast, the normal displacement $(\Phi_n)_k$ in the node k is not well defined and the frictional contact condition (5.13) has to be reconsidered in the context of a discontinuity of the normal.

To fix the ideas, let us suppose that we deal with an in-plane geometry and we have a parametric description $t \to (x_1(t), x_2(t))$ of Γ_C. Let t_P be the abscise corresponding to $P = (x_1^P, x_2^P)$ and let $\mathbf{n}_-$ and $\mathbf{n}_+$ be the normal vectors defined for $t < t_P$ and for $t > t_P$ respectively, i.e. at the left and at the right side of P. We distinguish two situations: when the angle α between $\mathbf{n}_-$ and $\mathbf{n}_+$ is positive or negative (see Figure 3). In each case we may define the inward normal cone C_n by

$$C_n =: \begin{cases} \{\boldsymbol{v}\ ;\ \boldsymbol{v}\cdot\mathbf{n}_- \le 0\} \cap \{\boldsymbol{v}\ ;\ \boldsymbol{v}\cdot\mathbf{n}_+ \le 0\}, & \text{if} \quad \alpha > 0 \\ \{\boldsymbol{v}\ ;\ \boldsymbol{v}\cdot\mathbf{n}_- \le 0\} \cup \{\boldsymbol{v}\ ;\ \boldsymbol{v}\cdot\mathbf{n}_+ \le 0\}, & \text{if} \quad \alpha < 0 \end{cases} \tag{7.22}$$

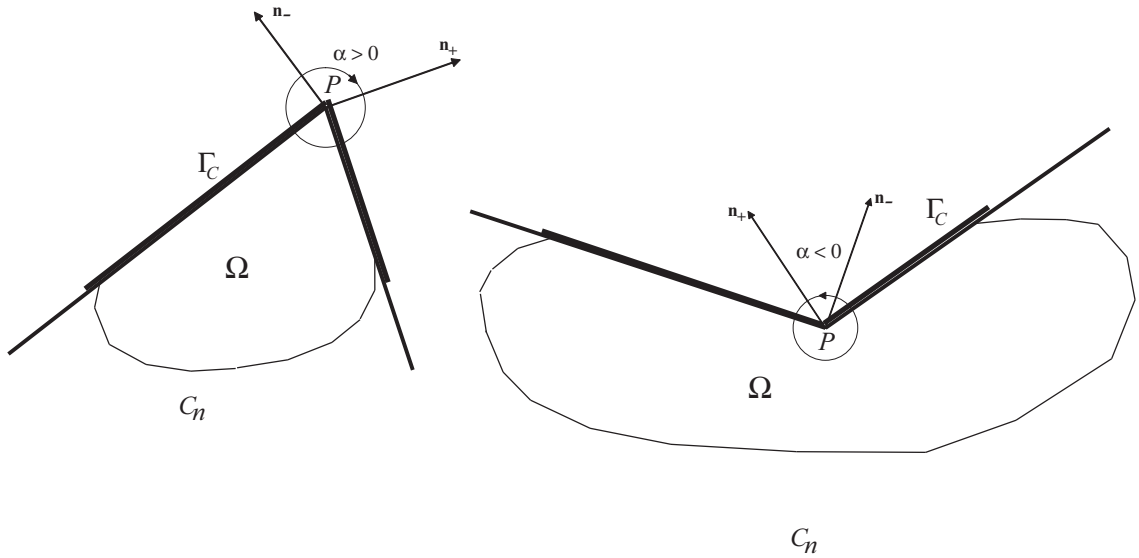

Figure 3: Examples of discontinuities of the normal and of the inward normal cone C_n. Left: the angle α between $\mathbf{n}_-$ and $\mathbf{n}_+$ is positive. Right: the angle α between $\mathbf{n}_-$ and $\mathbf{n}_+$ is negative.

The frictional contact condition (5.13) in the wedged point P (i.e. for $i = k$) reads

$$(\mathbf{\Phi}_h)_k \in C_n, \quad |(\boldsymbol{\lambda}_{ht})_k| \leq -\mu(\lambda_{hn})_k, \quad \begin{cases} (\lambda_{hn})_k = 0, & \text{if} \quad (\mathbf{\Phi}_h)_k \in Int[C_n] \\ (\lambda_{hn})_k \leq 0, & \text{if} \quad (\mathbf{\Phi}_h)_k \in \partial C_n, \end{cases} \tag{7.23}$$

where $Int[C_n]$ and ∂C_n denote the interior and the boundary of the inward normal cone C_n.

For all $\boldsymbol{\tau}_h \in \mathbf{\Sigma}_{ht}$ and $w_h \in S_{hn}$ we denote by $\boldsymbol{u}_h^- = \mathcal{U}_h^-(\boldsymbol{\tau}_h, w_h)$ and by $\boldsymbol{u}_h^+ = \mathcal{U}_h^+(\boldsymbol{\tau}_h, w_h)$ the solution of (5.15) for the choice of the normal $\mathbf{n} = \mathbf{n}_-$ and $\mathbf{n} = \mathbf{n}_+$ in the wedged point P, respectively. We introduce now the linear operators $M_k^-, M_k^+ : \mathbf{\Sigma}_{ht} \times S_{hn} \to \mathbf{R}$ given by

$$M_k^-(\boldsymbol{\tau}_h, w_h) =: (\mathcal{U}_h^-(\boldsymbol{\tau}_h, w_h))_k \cdot \mathbf{n}_+, \quad M_k^+(\boldsymbol{\tau}_h, w_h) =: (\mathcal{U}_h^+(\boldsymbol{\tau}_h, w_h))_k \cdot \mathbf{n}_-,$$

and let $\mathcal{L}_h^-(\boldsymbol{\tau}_h, w_h)$ and $\mathcal{L}_h^+(\boldsymbol{\tau}_h, w_h)$ be defined by (5.16) in which we have replaced $\boldsymbol{u}_h$ by $\boldsymbol{u}_h^-$ and by $\boldsymbol{u}_h^+$, respectively. The linear operators $\mathcal{L}_h^-(\cdot,\cdot)$ and $\mathcal{L}_h^+(\cdot,\cdot)$ are represented by the matrixes L_{ij}^- and L_{ij}^+ through (6.18) in which we have replaced $\mathcal{L}_h$ by $\mathcal{L}_h^-$ and by $\mathcal{L}_h^+$, respectively.

Discontinuities of the first kind : $\alpha > 0$. In this case the frictional contact condition (7.23) reads

$$\begin{cases} (\mathbf{\Phi}_h)_k \cdot \mathbf{n}_- \leq 0, \ \ (\mathbf{\Phi}_h)_k \cdot \mathbf{n}_+ \leq 0, \ \ (\lambda_{hn})_k[(\mathbf{\Phi}_h)_k \cdot \mathbf{n}_-][(\mathbf{\Phi}_h)_k \cdot \mathbf{n}_+] = 0, \\ (\lambda_{hn})_k \leq 0, \qquad |(\boldsymbol{\lambda}_{ht})_k| \leq -\mu(\lambda_{hn})_k, \end{cases} \tag{7.24}$$

To manage the above unilateral constraint we have to modify the definition (5.17) of

the cone of the admissible states as follows

$$\mathcal{S}_h^{adm} =: \{(\boldsymbol{\tau}_h, v_h) \in \mathcal{S}_h \ ; \quad (\mathcal{L}_h^-(\boldsymbol{\tau}_h, v_h))_i \leq 0, \ (v_h)_i(\mathcal{L}_h^-(\boldsymbol{\tau}_h, v_h))_i = 0, \text{ for all } i \neq k$$
$$M_k^-(\boldsymbol{\tau}_h, w_h) \leq 0, \ (\mathcal{L}_h^-(\boldsymbol{\tau}_h, v_h))_k \leq 0, \ (v_h)_k(\mathcal{L}_h^-(\boldsymbol{\tau}_h, v_h))_k M_k^-(\boldsymbol{\tau}_h, w_h) = 0\},$$

and to replace the matrix L from the definition (6.20) of $\mathcal{J}$ by L^-. Then the critical wedged friction coefficient μ_h^w is obtained as the minimum of $\mathcal{J}$ through the optimization technique based on the genetic algorithms presented in the previous section. Let us remark that if one chooses $\mathcal{L}^+$ and M_k^+ in the definition of $\mathcal{S}_h^{adm}$ and L^+ in the definition (6.20) of $\mathcal{J}$, then μ_h^w the minimum of $\mathcal{J}$ is exactly the same.

Discontinuities of the second kind : $\alpha < 0$**.** In this case the frictional contact condition (7.23) reads

$$\begin{cases} \begin{cases} (\boldsymbol{\Phi}_h)_k \cdot \mathbf{n}_- \leq 0, \ \ (\lambda_{hn})_k(\boldsymbol{\Phi}_h)_k \cdot \mathbf{n}_- = 0, \ \ (\lambda_{hn})_k[(\boldsymbol{\Phi}_h)_k \cdot \mathbf{n}_+]_- = 0, \\ \text{or} \\ (\boldsymbol{\Phi}_h)_k \cdot \mathbf{n}_+ \leq 0, \ (\lambda_{hn})_k(\boldsymbol{\Phi}_h)_k \cdot \mathbf{n}_+ = 0, \ \ (\lambda_{hn})_k[(\boldsymbol{\Phi}_h)_k \cdot \mathbf{n}_-]_- = 0, \end{cases} \\ \\ (\lambda_{hn})_k \leq 0, \qquad |(\boldsymbol{\lambda}_{ht})_k| \leq -\mu(\lambda_{hn})_k, \end{cases} \tag{7.25}$$

where we have denoted by $[x]_- =: (x - |x|)/2$ the negative part of x.

To handle these unilateral conditions it's more convenient to solve two optimization problems for two functionals $\mathcal{J}^-$ and $\mathcal{J}^+$. In order to do it let

$$\mathcal{S}_{h-}^{adm} =: \{(\boldsymbol{\tau}_h, v_h) \in \mathcal{S}_h \ ; \quad (\mathcal{L}_h^-(\boldsymbol{\tau}_h, v_h))_i \leq 0, \ (v_h)_i(\mathcal{L}_h^-(\boldsymbol{\tau}_h, v_h))_i = 0, \text{ for all } i,$$
$$(\mathcal{L}_h^-(\boldsymbol{\tau}_h, v_h))_k[M_k^-(\boldsymbol{\tau}_h, w_h)]_- = 0\},$$

$$\mathcal{S}_{h+}^{adm} =: \{(\boldsymbol{\tau}_h, v_h) \in \mathcal{S}_h \ ; \quad (\mathcal{L}_h^+(\boldsymbol{\tau}_h, v_h))_i \leq 0, \ (v_h)_i(\mathcal{L}_h^+(\boldsymbol{\tau}_h, v_h))_i = 0, \text{ for all } i,$$
$$(\mathcal{L}_h^+(\boldsymbol{\tau}_h, v_h))_k[M_k^+(\boldsymbol{\tau}_h, w_h)]_- = 0\},$$

be the two cones of admissible states. We denote by K^- and K^+ the sets defined through (6.19) in which we have replaced $\mathcal{S}_h^{adm}$ by $\mathcal{S}_{h-}^{adm}$ and by $\mathcal{S}_{h+}^{adm}$, respectively. We can define now the functionals $\mathcal{J}^-$ and $\mathcal{J}^+$ through (6.20), in which L, K are replaced by L^-, K^- and by L^+, K^+, respectively. For each of these functional we can use the genetic optimization technique presented in the previous section to find

$$\mu_{h-}^w = \min_{(s_1,..,s_p)\in[-1,1]^p} \mathcal{J}^-(s_1, .., s_p), \quad \mu_{h+}^w = \min_{(s_1,..,s_p)\in[-1,1]^p} \mathcal{J}^+(s_1, .., s_p),$$

and the corresponding wedged configurations $\boldsymbol{\Phi}_{h-}^*$ and $\boldsymbol{\Phi}_{h+}^*$. The critical wedged frictional coefficient μ_h^w is the minimum of these two numbers, i.e.

$$\mu_h^w = \min\{\mu_{h-}^w, \mu_{h+}^w\},$$

and the (global) wedged configuration $\boldsymbol{\Phi}_h^*$ is $\boldsymbol{\Phi}_{h-}^*$ or $\boldsymbol{\Phi}_{h+}^*$, depending if $\mu_{h-}^w < \mu_{h+}^w$ or $\mu_{h-}^w > \mu_{h+}^w$.

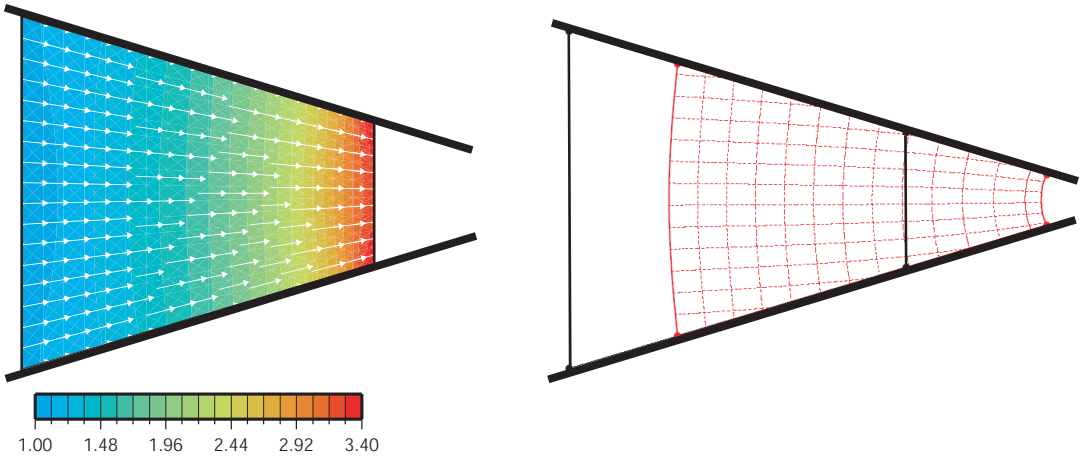

Figure 4: Left: the distribution of the wedged configuration $\mathbf{\Phi}_h^*$ (arrows) and of the stress $|\boldsymbol{\sigma}(\mathbf{\Phi}_h^*)|$ (color scale). Right: the deformed mesh corresponding to the displacement $\mathbf{\Phi}_h^*$.

8. Numerical results

First example. For the first test we wanted to give an example when the wedged problem and the (linear) spectral problem has the same solution. For that we have chosen the wedged geometry of Figure 4, where we do not expect a non contact zone. Here the contact surface Γ_C is represented by the solid line and the other part of the boundary is stress free. For this particular problem it is simple and natural to choose the partition $\mathcal{P}$ of the boundary Γ_C ($\Gamma_C^{free} = \emptyset$ and $\Gamma_C^0 = \Gamma_C$) and to associate a given "directional function" $\chi : \Gamma_C^0 \to \{-1, 1\}$. We have found a very good agreement ($\mu_h^w = 0.300001$ and $\mu_h^s = 0.300005$) between the two solutions (i.e. between $(\mathbf{\Phi}_h^*, \mu_h^w)$ and $(\mathbf{\Phi}_h^s, \mu_h^s)$).

Second example. The second example has be chosen such that an unexpected wedged configuration exists. The geometry is plotted in Figure 5, with the surface Γ_C represented by the solid line and the other part of the boundary is stress free. The contact surface has a normal discontinuity of the first kind (i.e. $\alpha > 0$) in the left corner of the bottom, we have used the techniques presented in the previous section to handle this difficulty. The wedged frictional coefficient was founded to be $\mu_h^w = 1.59627$ and the corresponding wedged configuration $\mathbf{\Phi}_h^*$ is plotted in Figure 5.

In Figure 6 we have plotted the distribution of the displacements (normal and tangential) on the contact surface. As it can be seen, the founded wedged configuration $\mathbf{\Phi}_h^*$ has no free zone where the elastic body is not in contact with the rigid support.

In order to see the influence of the mesh size (i.e. of h) we have performed the same computations on three meshes. The first one has 61 nodes ($h = h_1$), the second one has 31 nodes ($h = h_2$) and the third one has 16 nodes ($h = h_3$) on Γ_C. We have found the variation of the wedged frictional coefficient μ_h^w is not large

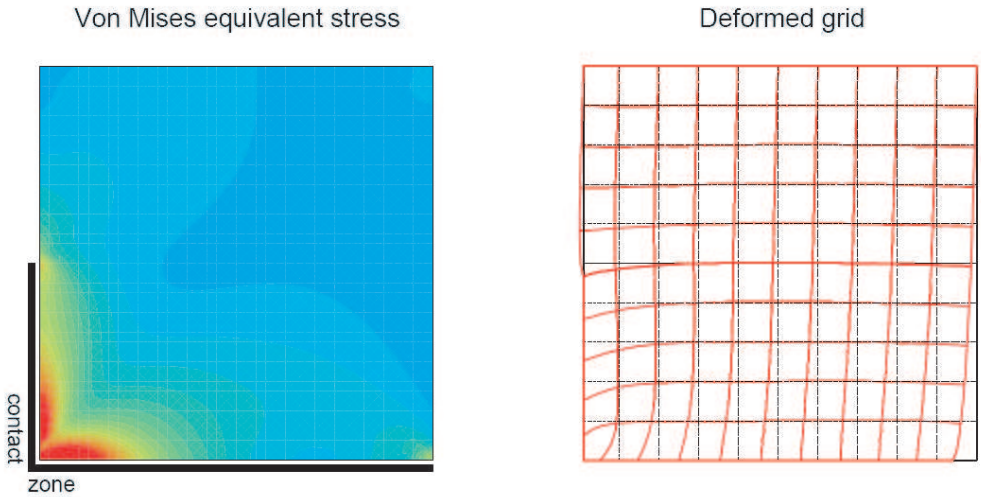

Figure 5: The computed wedged configuration. Left: the distribution of the Von-Mises stress $|\boldsymbol{\sigma}'(\boldsymbol{\Phi}_h^*)|$ (color scale). Right: the deformed mesh corresponding to the displacement $\boldsymbol{\Phi}_h^*$.

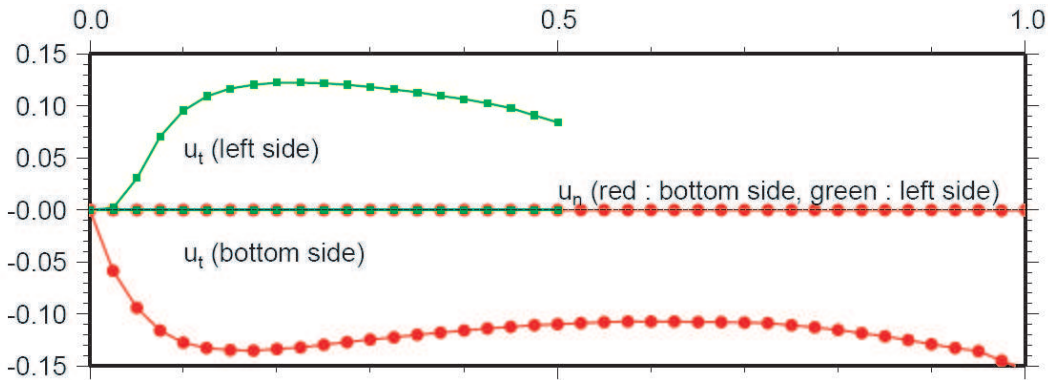

Figure 6: The distribution of the normal displacement and of the tangential displacement on the contact zone Γ_C (red : bottom side, green : left side).

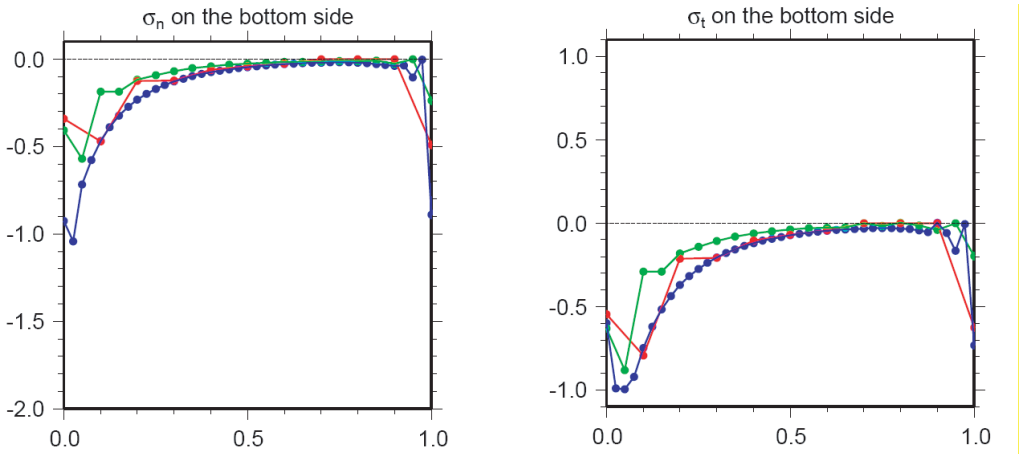

Figure 7: The distribution of the normal stress (left) and of the tangential stress (right) on the bottom side of the contact boundary for different meshes: 61 nodes (blue), 31 nodes (green) and 16 nodes (red) on Γ_C.

($\mu^w_{h_1} = 1.59627, \mu^w_{h_2} = 1.55045, \mu^w_{h_3} = 1.68817$) and the normal and the distribution of tangential stresses are very close (see Figure 7). As far as we have computed the wedged configurations we have not found any significant dependence on the mesh of the numerical results.

Third example. In the third test we wanted to point out that there are wedged configurations with free zones on the contact surface. For that we have considered the geometry drawn in Figure 6. As before the contact surface Γ_C is represented by the solid line and the other part of the boundary is stress free. The normal discontinuity of the contact surface, which is of the second kind (i.e. $\alpha < 0$), has been handled using the techniques presented in the previous section. The wedged frictional coefficient was founded to be $\mu^w_h = 0.6330019$ and the corresponding wedged configuration $\mathbf{\Phi}^*_h$ is plotted in Figure 8. The founded wedged solution $\mathbf{\Phi}^*_h$ exhibits two no contact zones.

9. References

[1] J. Barber and P. Hild (2004), Non-uniqueness, eigenvalues solutions and wedged configurations involving Coulomb frivtion, Proceedings of IJTC 2004, ASME/STLE International Joint Tribology Conference Long Beach California, USA, October 24–27

[2] S. Cahon, N. Melab, E.G. Talbi, M. Schoenauer (2003), ParaDisEO-Based Design of Parallel and Distributed Evolutionary Algorithms, Artificial Evolution, 216–228.

[3] L. Davis (1991), Handbook of Genetic Algorithms, Van Nostrand Reinhold, New York

[4] A. E. Eiben, M. Schoenauer (2002), Evolutionary computing, Special issue on evolutionary computing , Inform. Process. Lett., 82, 1–6.

[5] R. Hassani, P. Hild and I. R. Ionescu (2004), "Sufficient conditions of non-

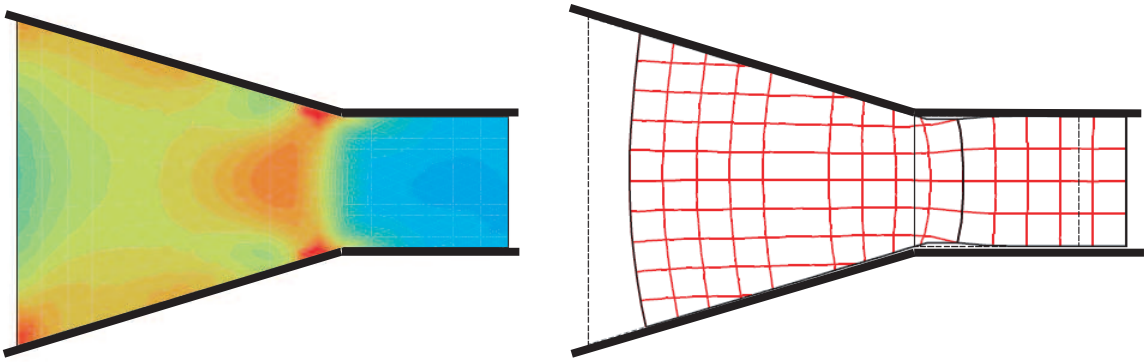

Figure 8: The computed wedged configuration. Left: the distribution of the Von-Mises stress $|\boldsymbol{\sigma}'(\boldsymbol{\Phi}_h^*)|$ (color scale). Right: the deformed mesh corresponding to the displacement $\boldsymbol{\Phi}_h^*$. Note that the wedged configuration exhibits two no contact zones.

uniqueness for the Coulomb friction problem", Math. Meth. Appl. Sciences, Vol. 27, No. 3: 47–67

[6] R. Hassani, P. Hild, I. R. Ionescu and N. Sakki (2003), "A mixed finite element method and solution multiplicity for Coulomb frictional contact", *Computer Methods in Appl. Mech. and Engrg.*, vol. 192:4517–4531

[7] A. Klarbring (1990), Examples of non-uniqueness and non-existence of solutions to quasistatic contact problems with friction, Ing. Archiv 60 529–541.

[8] Martins J, Pinto da Costa A, (2004), Bifurcations and instabilities in frictional contact problems: theoretical relations, computational methods and numerical results, European Congress on Computational Methods in Applied Sciences and Engineering, P. Neittaanmaki, T. Rossi, S. Korotov, E. Onate, J. Priaux, and D. Knorzer (eds.)